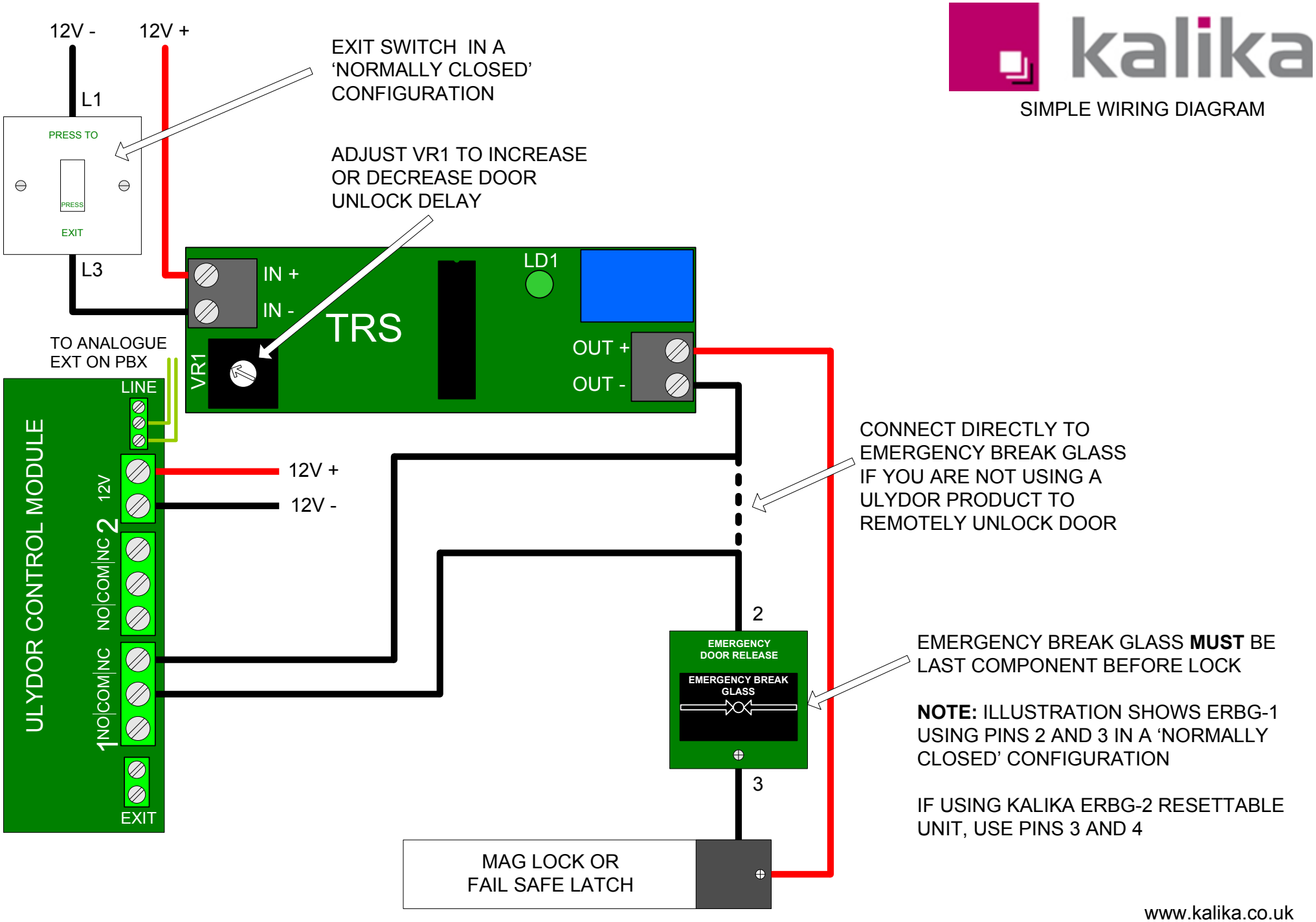
kalika
SIMPLE WIRING DIAGRAM
12V -
12V +
L1
L3
PRESS TO
PRESS
EXIT
EXIT SWITCH IN A 'NORMALLY CLOSED' CONFIGURATION
ADJUST VR1 TO INCREASE OR DECREASE DOOR UNLOCK DELAY
IN +
IN -
TRS
LD1
VR1
OUT +
OUT -
TO ANALOGUE EXT ON PBX
LINE
ULYDOR CONTROL MODULE
12V
2
NO COM NC
1 NO COM NC
EXIT
12V +
12V -
CONNECT DIRECTLY TO EMERGENCY BREAK GLASS IF YOU ARE NOT USING A ULYDOR PRODUCT TO REMOTELY UNLOCK DOOR
2
EMERGENCY DOOR RELEASE
EMERGENCY BREAK GLASS
3
EMERGENCY BREAK GLASS MUST BE LAST COMPONENT BEFORE LOCK
NOTE: ILLUSTRATION SHOWS ERBG-1 USING PINS 2 AND 3 IN A 'NORMALLY CLOSED' CONFIGURATION
IF USING KALIKA ERBG-2 RESETTABLE UNIT, USE PINS 3 AND 4
MAG LOCK OR FAIL SAFE LATCH
www.kalika.co.uk